WGN

带有空心轴的准双曲面齿轮直角行星减速机 —— 低噪音，压入式安装

我们的 **WGN** 是一种运行噪音特别轻的直角式空心轴减速机。与此同时，准双曲面齿轮提高了您的工件表面质量。借助胀紧套可以直接连接应用 —— 这样做简单、安全，而且为您的设计节省了更多空间。

The hypoid-toothed right-angle gearbox with hollow shaft – low-noise and force-fit mounting

Our **WGN** is the right-angle hollow shaft gearbox that operates particularly quietly. At the same time, the hypoid gearing increases the quality of the surface of your workpiece. With a shrink disc, it can be connected directly to the application - this is uncomplicated, safe and opens up new design possibilities.

额定扭矩 Nominal output torque	**22 - 320 Nm**
径向力 Radial force	**2700 - 10000 N**
轴向力 Axial force	**4300 - 14500 N**
回程间隙 Torsional backlash	**5 arcmin**
防护等级 Protection class	**IP65**

结构尺寸
Frame sizes

70 **90** **115** **142**

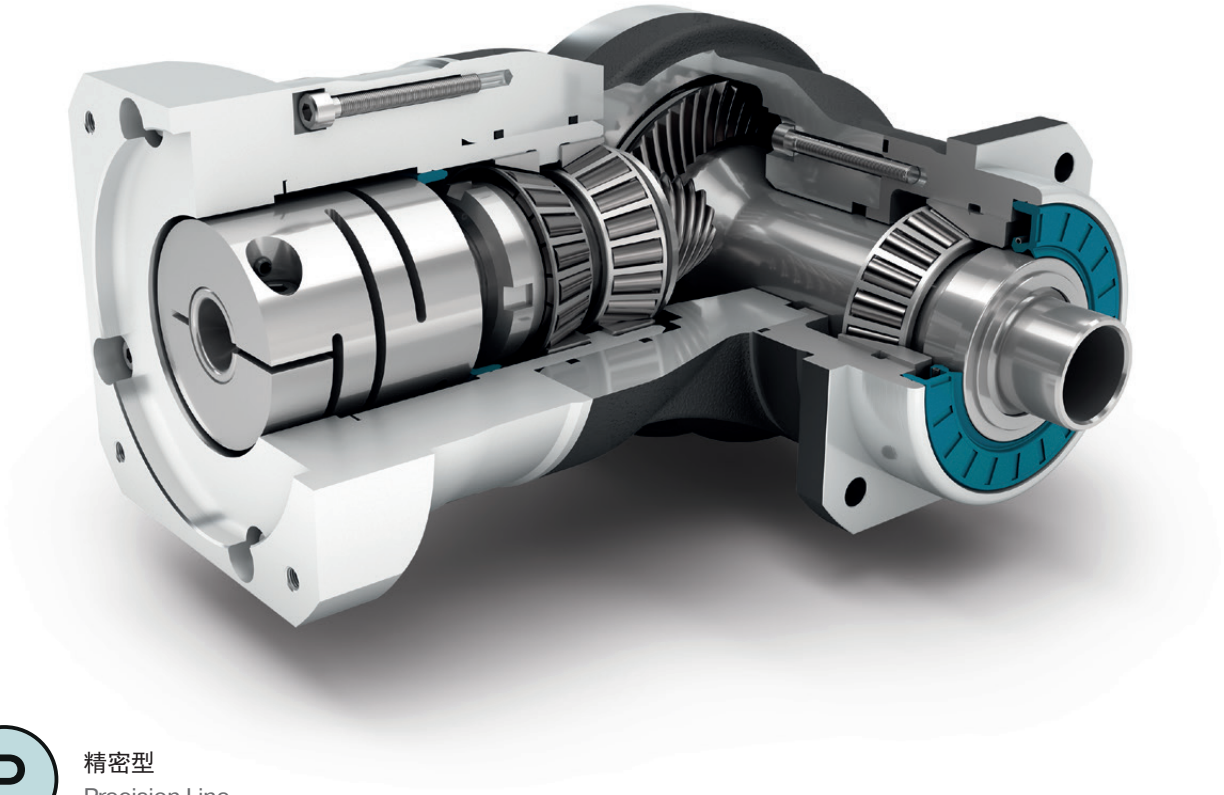

精密型
Precision Line

直角型减速机
Right angle gearbox

旋转方向 反方向
Counterdirectional rotation

准双曲面齿轮 直角箱
Hypoid gear right angle stage

正方形输出法兰
Square type output flange

配有预紧的圆锥滚子轴承
Preloaded tapered roller bearings

径向轴密封
Rotary shaft seal

输出端带有超长定心环
Extra long centering collar

夹紧系统的空心轴，带有胀紧套
Hollow shaft for clamping system with shrink disc

技术特点的详细解释，请从第173页读起。
Detailed explanations of the technical features starting on page 173.

Code	减速机参数	Gearbox characteristics			WGN070	WGN090	WGN115	WGN142	p(1)
	使用寿命 (L_{10h})	Service life (L_{10h})	t_L	h	20000				
	T_{2N} x 0,88 时的使用寿命	Service life at T_{2N} x 0,88			30000				
	满载时效率(2)	Efficiency at full load(2)	η	%	95				
	最低工作温度	Min. operating temperature	T_{min}	°C	-25				
	最高工作温度	Max. operating temperature	T_{max}		90				
	防护等级	Protection class			IP65				
S	标准润滑	Standard lubrication			润滑油(终生润滑) / Oil (lifetime lubrication)				
F	食品级润滑	Food grade lubrication			润滑油(终生润滑) / Oil (lifetime lubrication)				
	安装位置	Installation position			任意 / Any				
S	标准回程间隙	Standard backlash	j_t	arcmin	< 5				
R	降低回程间隙	Reduced backlash			-				
	抗扭刚度(2)	Torsional stiffness(2)	c_g	Nm / arcmin	1,6 - 2,2	4,2 - 5,7	9,2 - 12,4	23,5 - 31,5	
	减速机重量(2)	Gearbox weight(2)	m_G	kg	3,2 - 3,3	5,1 - 5,6	10,9	23,3 - 23,8	
S	标准的箱体表面	Standard surface			直角箱体: 铝 – 阳极氧化处理 (黑色) Right angle housing: Aluminum – anodized (black)				
	运行噪音(3)	Running noise(3)	Q_g	dB(A)	66	67	68	70	
	基于减速机输入法兰的最大弯矩(4)	Max. bending moment based on the gearbox input flange(4)	M_b	Nm	12	25,5	53	120	

输出轴载荷	Output shaft loads			WGN070	WGN090	WGN115	WGN142	p(1)
20,000 h 径向力(5)(6)	Radial force for 20,000 h(5)(6)	$F_{r\,20.000\,h}$	N	2700	4000	6500	10000	
20,000 h 轴向力(5)(6)	Axial force for 20,000 h(5)(6)	$F_{a\,20.000\,h}$		4300	5900	7000	14500	
30,000 h 径向力(5)(6)	Radial force for 30,000 h(5)(6)	$F_{r\,30.000\,h}$		2700	4000	6500	10000	
30,000 h 轴向力(5)(6)	Axial force for 30,000 h(5)(6)	$F_{a\,30.000\,h}$		3700	5200	6100	12000	
最大径向力(6)(7)	Maximum radial force(6)(7)	$F_{r\,Stat}$		2700	4000	6500	10000	
最大轴向力(6)(7)	Maximum axial force(6)(7)	$F_{a\,Stat}$		4300	5900	7000	14500	
20,000 h 倾斜力矩(5)(7)	Tilting moment for 20,000 h(5)(7)	$M_{K\,20.000\,h}$	Nm	252	442	970	1505	
30,000 h 倾斜力矩(5)(7)	Tilting moment for 30,000 h(5)(7)	$M_{K\,30.000\,h}$		252	442	970	1505	

转动惯量	Moment of inertia			WGN070	WGN090	WGN115	WGN142	p(1)
转动惯量(2)	Mass moment of inertia(2)	J	$kgcm^2$	0,502 - 0,834	1,018 - 1,417	4,805 - 6,111	12,934 - 18,905	

(1) 减速机级数
(2) 传动比相关的数值可在 Tec Data Finder 中检索 – www.neugart.com
(3) 距离减速机1 m 时; 在输入转速为 n_1=3000 min^{-1} 且无负荷时测得; i=5
(4) 最大电机重量* (单位 : kg) = 0.2 x M_b / 电机长度 (单位: m)
* 电机重量对称分布
* 水平和固定的安装位置
(5) 数据以 n_2=100 min^{-1} 的输出轴转速为准。
(6) 以输出轴中心为准
(7) 更改 T_{2N}, F_r, F_a 以及周期和轴承使用寿命时, 数值存在偏差(部分较高)。利用 NCP 针对应用进行专门设计 – www.neugart.com

(1) Number of stages
(2) The ratio-dependent values can be retrieved in Tec Data Finder – www.neugart.com
(3) Sound pressure level from 1 m, measured on input running at n_1=3000 rpm no load; i=5
(4) Max. motor weight* in kg = 0.2 x M_b / motor length in m
* with symmetrically distributed motor weight
* with horizontal and stationary mounting
(5) These values are based on an output shaft speed of n_2=100 rpm
(6) Based on center of output shaft
(7) Other (sometimes higher) values following changes to T_{2N}, F_r, F_a, cycle, and service life of bearing. Application specific configuration with NCP – www.neugart.com

输出扭矩	Output torques			WGN070	WGN090	WGN115	WGN142	i(1)	p(2)
额定输出扭矩(3)	Nominal output torque(3)	T_{2N}	Nm	45	70	140	320	4	1
				42	70	140	280	5	
				28	51	91	189	7	
				27	50	90	180	8	
				22	40	75	160	10	
最大输出扭矩(4)	Max. output torque(4)	T_{2max}	Nm	72	112	224	512	4	
				67	112	224	448	5	
				45	82	145	302	7	
				43	80	144	288	8	
				35	64	120	256	10	
急停扭矩(5)	Emergency stop torque(5)	T_{2Stop}	Nm	100	200	400	800	4	
				100	200	400	800	5	
				75	150	300	700	7	
				75	150	300	700	8	
				75	150	300	700	10	

输入转速	Input speeds			WGN070	WGN090	WGN115	WGN142	i(1)	p(2)
T_{2N} 和 S1 时的平均热输入转速(4)(5)	Average thermal input speed at T_{2N} and S1(4)(5)	n_{1N}	min^{-1}	1750(6)	1700(6)	1150(6)	950(6)	4	1
				1900(6)	1850(6)	1200(6)	1000(6)	5	
				2250(6)	2200(6)	1400(6)	1200(6)	7	
				2300(6)	2200(6)	1400(6)	1200(6)	8	
				2400(6)	2350(6)	1500(6)	1300(6)	10	
最高机械输入转速(4)	Max. mechanical input speed(4)	n_{1Limit}	min^{-1}	16000	14000	9500	8000		

(1) 传动比 ($i=n_1/n_2$)
(2) 减速机级数
(3) 利用 NCP 针对应用进行专门设计 – www.neugart.com
(4) 允许输出轴转动30.000转; 参见第 166 页
(5) 允许 1000 次
(6) 利用 NCP 针对应用设计转速 – www.neugart.com
(7) 定义请参见第 166 页
(8) 在 50% T_{2N} 输出和 S1 模式下 的平均热输入转速

(1) Ratios ($i=n_1/n_2$)
(2) Number of stages
(3) Application specific configuration with NCP – www.neugart.com
(4) 30,000 rotations of the output shaft permitted; see page 167
(5) Permitted 1000 times
(6) Application-specific speed configurations with NCP – www.neugart.com
(7) See page 167 for the definition
(8) Average thermal input speed at 50% T_{2N} and S1

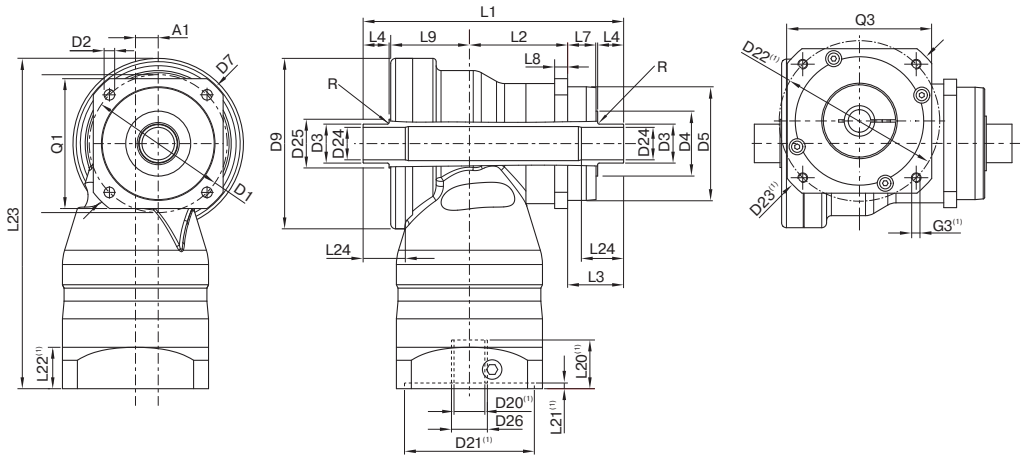

图示为带平键的 WGN090 / 1 级 / 双侧空心输出轴 / 19 mm 锁紧系统 / 适配电机法兰 – 2 件式 – 圆形通用法兰 / B5 电机法兰类型
Drawing corresponds to a WGN090 / 1-stage / hollow output shaft on both sides / 19 mm clamping system / motor adaptation – 2-part – round universal flange / B5 flange type motor

(1) 具体尺寸视电机/减速机法兰而定。可以在 www.neugart.com 下 Tec Data Finder中针对每个电机适配电机特有的输入法兰几何尺寸。
(1) The dimensions vary with the motor/gearbox flange. The input flange dimensions can be retrieved for each specific motor in Tec Data Finder at www.neugart.com

几何尺寸(2)	Geometry(2)			WGN070	WGN090	WGN115	WGN142	p(3)	Code
轴向偏差	Axis offset	A1		10	14	20	26	1	
输出端安装孔节圆直径	Pitch circle diameter output	D1		68 - 75	85	120	165		
输出端安装孔直径	Mounting bore output	D2	4x	5,5	6,5	9,0	11,0		
输出轴直径	Shaft diameter output	D3	h8	18	24	36	50		
输出轴轴肩直径	Shaft collar output	D4		30	34	45	70		
输出端定位凸台直径	Centering diameter output	D5	g7	60	70	90	130		
输出法兰对角线尺寸	Diagonal dimension output	D7		92	100	140	185		
最大直径	Max. diameter	D9		86	105	120	170		
输出端法兰外方	Flange cross section output	Q1	■	70	80	110	142		
箱体长度	Housing length	L2		46,5	60,5	73,5	76		
输出轴轴长	Shaft length output	L3		33	34,5	48	54		
输出端定位凸台深度	Centering depth output	L7		18	17,5	27	28		
输出端法兰厚度	Flange thickness output	L8		7	8	10	12		
偏差距离	Offset length	L9		43	48,5	56,5	87		
最小总高度	Min. overall height	L23		179	203,5	247,5	318		
最大半径	Max. radius	R		1,5					
电机轴直径j6/k6	Motor shaft diameter j6/k6	D20		更多信息见第 163/164 页 More information on page 163/164					
输入端锁紧系统直径	Clamping system diameter input	D26							
单侧空心输出轴	Hollow output shaft on one side								F
空心轴直径	Hollow shaft diameter	D24	H6	15	20	30	40		
总长	Total length	L1		122,5	143,5	178	217		
到轴肩的距离	Shaft length from shoulder	L4		14	16	20	25		
最小配合长度	Min. fit length	L24		20	25	30	35		
双侧空心输出轴	Hollow output shaft on both sides								G
空心轴直径	Hollow shaft diameter	D24	H6	15	20	30	40		
轴肩	Shaft collar	D25		25	30	42	55		
总长	Total length	L1		137,5	160,5	199	243		
到轴肩的距离	Shaft length from shoulder	L4		14	16	20	25		
最小配合长度	Min. fit length	L24		20	25	30	35		

(2) 所有的尺寸单位为mm
(3) 减速机级数

(2) Dimensions in mm
(3) Number of stages

WGN 胀紧套
WGN Shrink disc

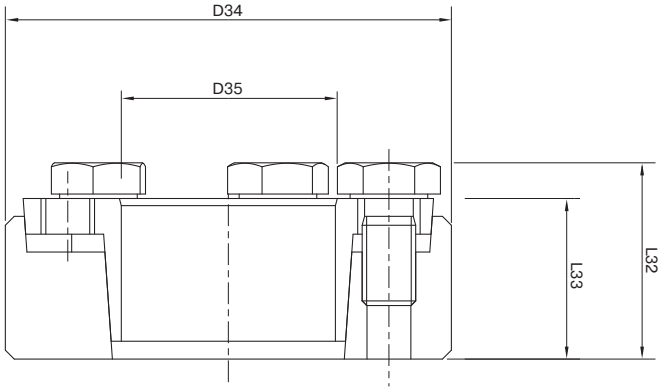

此胀紧套可以通过胀紧力锁紧的方式连接您的设备轴与WGN直角减速机中空输出轴。

This shrink disc can be used to make a force-fit connection between your machine shaft and the right angle hollow shaft gearbox WGN.

				WGN070	WGN090	WGN115	WGN142
产品编号	**Art. No.**			**58365**	**58366**	**58367**	**58368**
外径	Outside diameter	D34	mm	44	50	72	90
内径	Inner diameter	D35		18	24	36	50
总长[1]	Overall length[1]	L32		19	22	27,3	31,3
夹紧长度[1]	Clamp length[1]	L33		15	18	22	26
对边宽度	Width across flats	SW30		10	10	13	13
夹紧螺钉数量	Number of clamp screws	N30		4	5	5	8
转动惯量	Mass moment of inertia	J	kgcm²	0,4251	0,7831	4,212	11,55

建议承载轴公差为 h6，表面粗糙度 Ra < 3,2 µm. CAD数据下载地址：www.neugart.com

For the load shaft, we recommend a tolerance of h6 and a surface roughness of Ra < 3.2 µm. CAD data can be accessed at www.neugart.com

关于胀紧套的安装步骤，请参考相应的安装说明(www.neugart.com)。

For correct installation of the shrink disc, please refer to the corresponding mounting instructions (www.neugart.com)

供货范围

1 x 胀紧套 (含螺钉)

Included parts

1 x Shrink disc (incl. screws)

[1] 未夹紧状态下的尺寸

[1] Dimensions in unclamped state