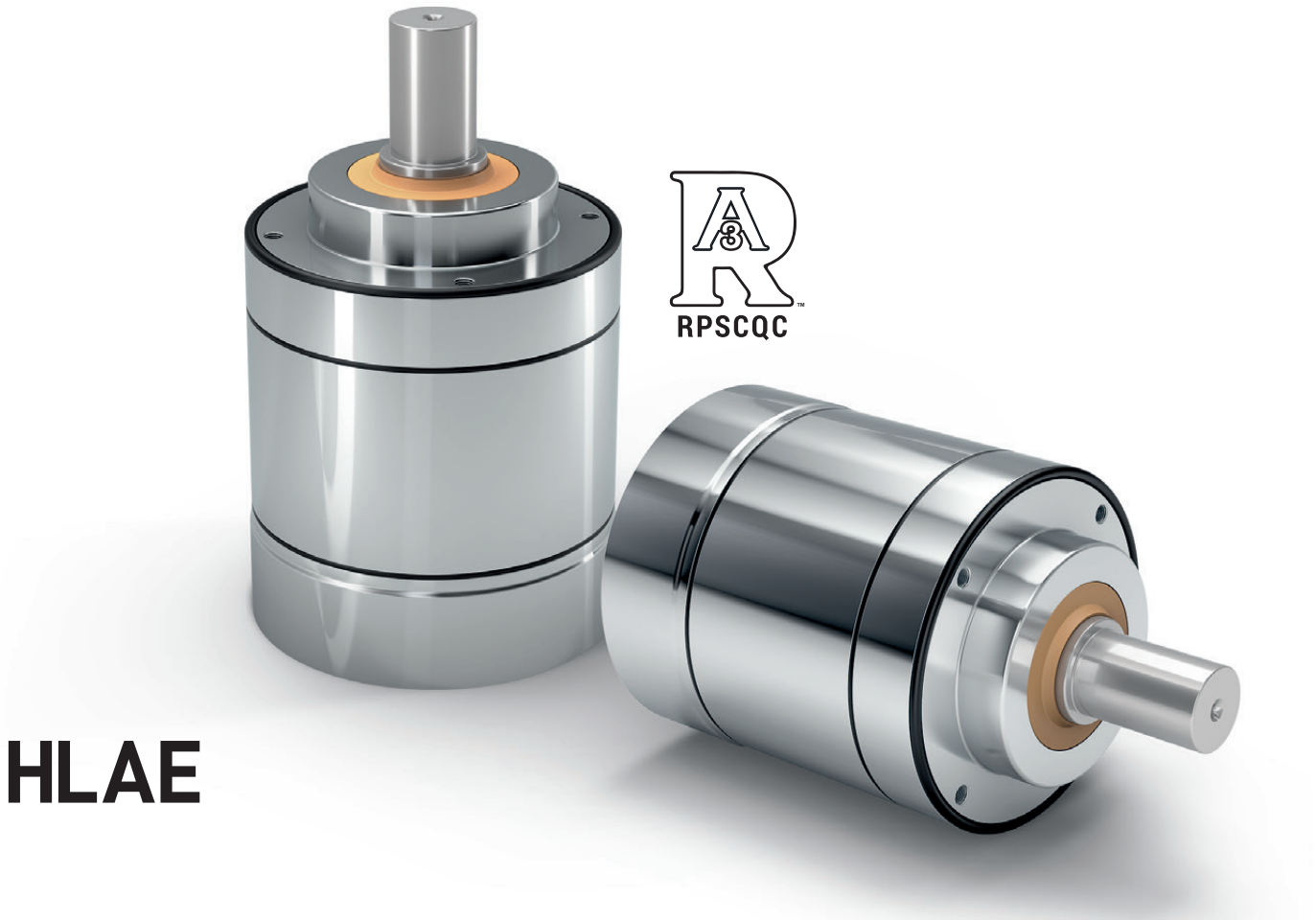

HLAE

独一无二的行星减速机 采用经过认证的卫生设计 – 安全清洁流程的理想之选

我们的 **HLAE** 是无与伦比的：它是全世界首款已经获得认证的卫生型设计行星减速机 —— 它造型灵活，不需要径向螺钉，且性能强大，又便于清洁。它是专为敏感应用领域而研发的，例如制药、化妆品与食品领域。

The unique planetary gearbox with certified hygienic design – ideal for reliable cleaning processes

Our **HLAE** is unique: It is the world's first planetary gearbox in a certified hygienic design – flexible without a radial bolt, powerful and yet easy and quick to clean. It was developed specifically for applications in sensitive areas such as pharmaceuticals, cosmetics and food.

额定扭矩 Nominal output torque	**15 - 171 Nm**
径向力 Radial force	**450 - 1450 N**
轴向力 Axial force	**550 - 2500 N**
回程间隙 Torsional backlash	**7 - 12 arcmin**
防护等级 Protection class	**IP69K**

结构尺寸
Frame sizes

70 **90** **110**

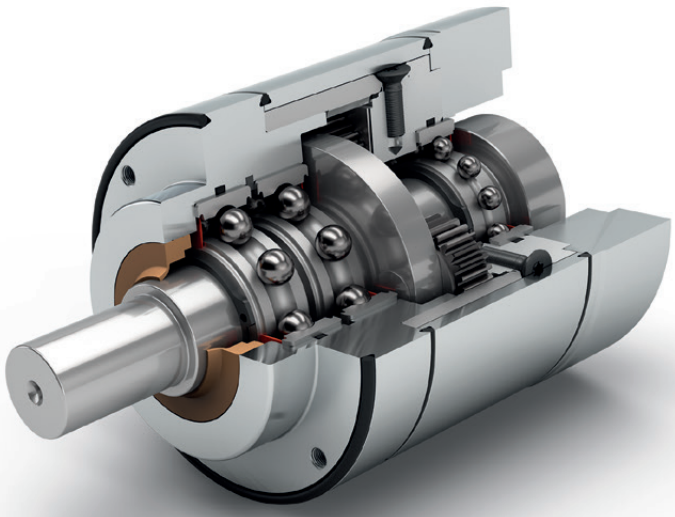

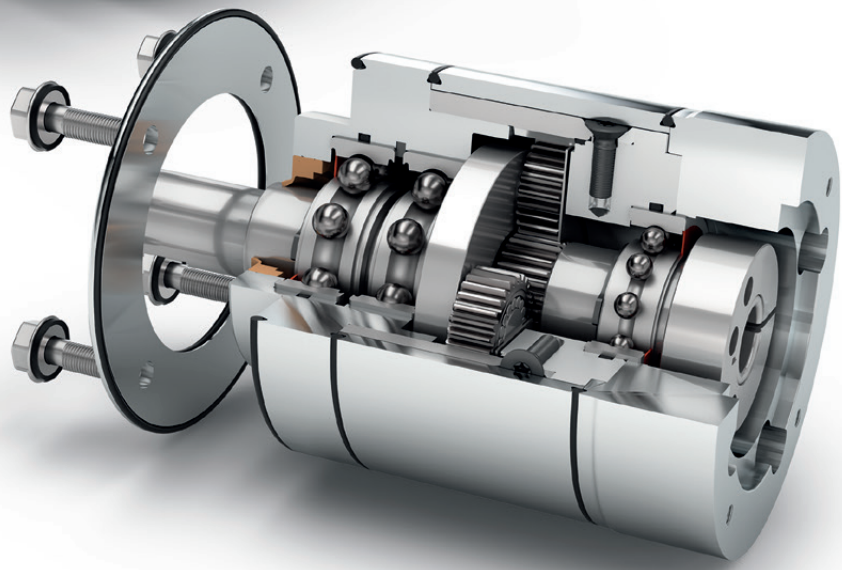

针对特定应用的减速机
Application-specific gearbox

同轴减速机
Coaxial gearbox

旋转方向 同方向
Equidirectional rotation

直齿
Spur gear

圆形输出法兰
Round type output flange

低摩擦深沟球轴承
Low-friction deep groove ball bearings

径向轴密封
Rotary shaft seal

输出端带有超长定心环
Extra long centering collar

行星齿轮架
Planet carrier in disc design

可选：FFKM 密封件
Option: FFKM seal

技术特点的详细解释，请从第173页读起。
Detailed explanations of the technical features starting on page 173.

Code	减速机参数	Gearbox characteristics			HLAE070	HLAE090	HLAE110	p[1]
	使用寿命 (L_{10h})	Service life (L_{10h})	t_L	h	30.000			
	满载时效率[2]	Efficiency at full load[2]	η	%	98			1
					97			2
	最低工作温度	Min. operating temperature	T_{min}	°C	-25			
	最高工作温度	Max. operating temperature	T_{max}		90			
	防护等级	Protection class			IP69K			
F	食品级润滑	Food grade lubrication			润滑脂(终生润滑) / Grease (lifetime lubrication)			
	安装位置	Installation position			任意 / Any			
S	标准回程间隙	Standard backlash	j_t	arcmin	< 10	< 7	< 7	1
					< 12	< 9	< 9	2
	抗扭刚度[2]	Torsional stiffness[2]	c_g	Nm / arcmin	2,3 - 3,1	6,6 - 8,7	14,7 - 19,5	1
					2,2 - 3,2	6,6 - 9,0	13,5 - 20,5	2
	减速机重量[2]	Gearbox weight[2]	m_G	kg	2,1	3,8	7,3 - 7,4	1
					2,4 - 2,5	4,3 - 4,5	8,7 - 9,0	2
S	标准的箱体表面	Standard surface			箱体: 不锈钢 1.4404 – 电解抛光 (R_a < 0,8 µm) Housing: Stainless steel 1.4404 – electropolished (R_a < 0,8 µm)			
	运行噪音[3]	Running noise[3]	Q_g	dB(A)	58	60	65	
	基于减速机输入法兰的最大弯矩[4]	Max. bending moment based on the gearbox input flange[4]	M_b	Nm	8	16	40	

输出轴载荷	Output shaft loads			HLAE070	HLAE090	HLAE110	p[1]
20,000 h 径向力[5][6]	Radial force for 20,000 h[5][6]	$F_{r\,20.000\,h}$	N	450	900	1450	
20,000 h 轴向力[5][6]	Axial force for 20,000 h[5][6]	$F_{a\,20.000\,h}$		550	1500	2500	
30,000 h 径向力[5][6]	Radial force for 30,000 h[5][6]	$F_{r\,30.000\,h}$		400	600	1250	
30,000 h 轴向力[5][6]	Axial force for 30,000 h[5][6]	$F_{a\,30.000\,h}$		500	1000	2000	
最大径向力[6][7]	Maximum radial force[6][7]	$F_{r\,Stat}$		1000	1250	5000	
最大轴向力[6][7]	Maximum axial force[6][7]	$F_{a\,Stat}$		1200	1600	3800	
20,000 h 倾斜力矩[5][7]	Tilting moment for 20,000 h[5][7]	$M_{K\,20.000\,h}$	Nm	22	49	109	
30,000 h 倾斜力矩[5][7]	Tilting moment for 30,000 h[5][7]	$M_{K\,30.000\,h}$		19	33	94	

转动惯量	Moment of inertia			HLAE070	HLAE090	HLAE110	p[1]
转动惯量[2]	Mass moment of inertia[2]	J	$kgcm^2$	0,065 - 0,135	0,753 - 0,866	1,579 - 2,630	1
				0,064 - 0,131	0,740 - 0,983	1,569 - 2,620	2

(1) 减速机级数
(2) 传动比相关的数值可在 Tec Data Finder 中检索 – www.neugart.com
(3) 距离减速机1 m 时; 在输入转速为 n_1=3000 min^{-1} 且无负荷时测得; i=5
(4) 最大电机重量* (单位 : kg) = 0.2 x M_b / 电机长度 (单位: m)
* 电机重量对称分布
* 水平和固定的安装位置
(5) 数据以 n_2=100 min^{-1} 的输出轴转速为准。
(6) 以输出轴中心为准
(7) 更改 T_{2N}, F_r, F_a 以及周期和轴承使用寿命时, 数值存在偏差(部分较高)。利用 NCP 针对应用进行专门设计 – www.neugart.com

(1) Number of stages
(2) The ratio-dependent values can be retrieved in Tec Data Finder – www.neugart.com
(3) Sound pressure level from 1 m, measured on input running at n_1=3000 rpm no load; i=5
(4) Max. motor weight* in kg = 0.2 x M_b / motor length in m
* with symmetrically distributed motor weight
* with horizontal and stationary mounting
(5) These values are based on an output shaft speed of n_2=100 rpm
(6) Based on center of output shaft
(7) Other (sometimes higher) values following changes to T_{2N}, F_r, F_a, cycle, and service life of bearing. Application specific configuration with NCP – www.neugart.com

输出扭矩	Output torques			HLAE070	HLAE090	HLAE110	i(1)	p(2)
额定输出扭矩(3)(4)	Nominal output torque(3)(4)	T_{2N}	Nm	28	85	115	3	1
				33	87	155	4	
				30	82	171	5	
				25	65	135	7	
				18	50	120	8	
				15	38	95	10	
				33	87	157	9	2
				33	80	171	12	
				33	82	171	15	
				33	87	171	16	
				33	87	171	20	
				30	82	171	25	
				33	87	171	32	
				30	82	171	40	
				18	50	120	64	
				15	38	95	100	
最大输出扭矩(4)(5)	Max. output torque(4)(5)	T_{2max}	Nm	45	136	184	3	1
				53	140	248	4	
				48	131	274	5	
				40	104	216	7	
				29	80	192	8	
				24	61	152	10	
				53	140	251	9	2
				53	140	274	12	
				53	131	274	15	
				53	140	274	16	
				53	140	274	20	
				48	131	274	25	
				53	140	274	32	
				48	131	274	40	
				29	80	192	64	
				24	61	152	100	

(1) 传动比 ($i=n_1/n_2$)
(2) 减速机级数
(3) 利用 NCP 针对应用进行专门设计 – www.neugart.com
(4) 平键 (代码 “A”)时的数值: 针对交变载荷
(5) 允许输出轴转动30.000转; 参见第 166 页

(1) Ratios ($i=n_1/n_2$)
(2) Number of stages
(3) Application specific configuration with NCP – www.neugart.com
(4) Values for feather key (code “A”): for repeated load
(5) 30,000 rotations of the output shaft permitted; see page 167

输出扭矩	Output torques			HLAE070	HLAE090	HLAE110	i[1]	p[2]
急停扭矩[3]	Emergency stop torque[3]	T_{2Stop}	Nm	56	170	230	3	1
				66	174	310	4	
				60	164	342	5	
				50	130	270	7	
				36	100	240	8	
				30	76	190	10	
				66	174	314	9	2
				66	174	342	12	
				66	164	342	15	
				66	174	342	16	
				66	174	342	20	
				60	164	342	25	
				66	174	342	32	
				60	164	342	40	
				36	100	240	64	
				30	76	190	100	

输入转速	Input speeds			HLAE070	HLAE090	HLAE110	i[1]	p[2]
T_{2N} 和 S1 时的平均热输入转速[4][5]	Average thermal input speed at T_{2N} and S1[4][5]	n_{1N}	min^{-1}	4000[6]	2700[6]	2000[6]	3	1
				4000[6]	3000[6]	2000[6]	4	
				4000	3400[6]	2150[6]	5	
				4000	3500[6]	2600[6]	7	
				4000	3500	2800[6]	8	
				4000	3500	3000[6]	10	
				4000	3500[6]	2400[6]	9	2
				4000	3500[6]	2450[6]	12	
				4000	3500	2550[6]	15	
				4000	3500	2650[6]	16	
				4000	3500	2850[6]	20	
				4000	3500	2950[6]	25	
				4000	3500	3000[6]	32	
				4000	3500	3000	40	
				4000	3500	3000	64	
				4000	3500	3000	100	
最高机械输入转速[4]	Max. mechanical input speed[4]	n_{1Limit}	min^{-1}	13000	7000	6500		

(1) 传动比 ($i=n_1/n_2$)
(2) 减速机级数
(3) 允许 1000 次
(4) 利用 NCP 针对应用设计转速 – www.neugart.com
(5) 定义请参见第 166 页
(6) 在 50% T_{2N} 输出和 S1 模式下 的平均热输入转速

(1) Ratios ($i=n_1/n_2$)
(2) Number of stages
(3) Permitted 1000 times
(4) Application-specific speed configurations with NCP – www.neugart.com
(5) See page 167 for the definition
(6) Average thermal input speed at 50% T_{2N} and S1

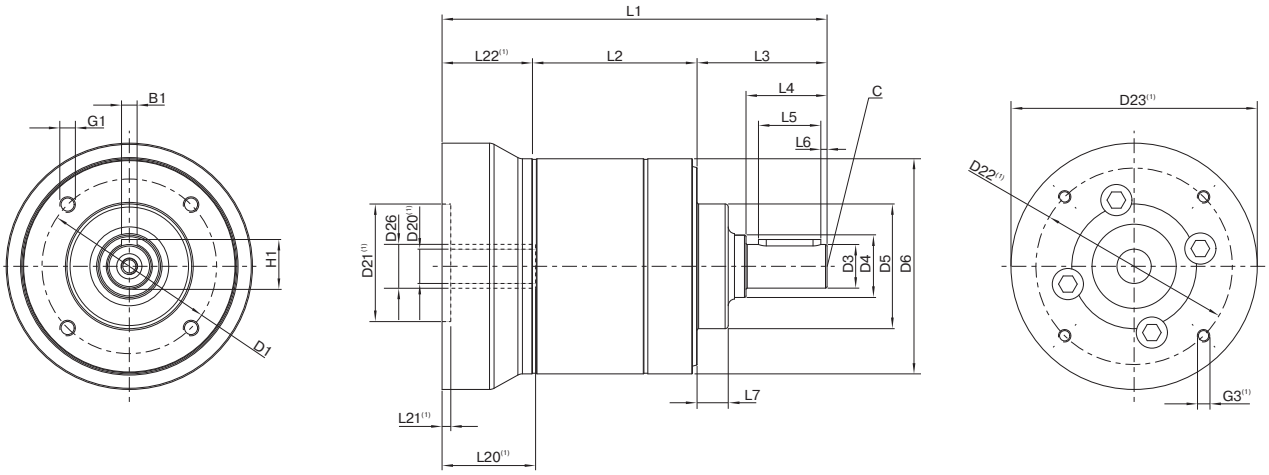

图示为带平键的 HLAE070 / 1 级 / 附带平键的输出轴 / 11 mm 锁紧系统 / 适配电机法兰 - 单一法兰 / B5 电机法兰类型
Drawing corresponds to a HLAE070 / 1-stage / output shaft with feather key / 11 mm clamping system / motor adaptation – one part / B5 flange type motor

(1) 具体尺寸视电机/减速机法兰而定。可以在 www.neugart.com 下 Tec Data Finder中针对每个电机适配电机特有的输入法兰几何尺寸。
(1) The dimensions vary with the motor/gearbox flange. The input flange dimensions can be retrieved for each specific motor in Tec Data Finder at www.neugart.com

几何尺寸(2)	Geometry(2)			HLAE070	HLAE090	HLAE110	p(3)	Code
输出端安装孔节圆直径	Pitch circle diameter output	D1		56	75	90		
输出轴直径	Shaft diameter output	D3	h7	14	20	25		
输出轴轴肩直径	Shaft collar output	D4		20	25	35		
输出端定位凸台直径	Centering diameter output	D5	h7	40	58	65		
箱体直径	Housing diameter	D6		69	88	109		
安装螺纹 x 深度	Mounting thread x depth	G1	4x	M5x11	M6x12	M8x20		
最小总长	Min. total length	L1		123,5	146	191	1	
				135,5	166	219	2	
箱体长度	Housing length	L2		53,0	68,0	89,0	1	
				65,0	88,0	117,0	2	
输出轴轴长	Shaft length output	L3		41,7	50	66,5		
输出端定位凸台深度	Centering depth output	L7		10	13	14		
电机轴直径j6/k6	Motor shaft diameter j6/k6	D20		更多信息见第 163/164 页 More information on page 163/164				
输入端锁紧系统直径	Clamping system diameter input	D26						
带平键的输出轴 (DIN 6885-1)	Output shaft with feather key (DIN 6885-1)			A 5x5x20	A 6x6x25	A 8x7x35		A
平键宽度 (DIN 6885-1)	Feather key width (DIN 6885-1)	B1		5	6	8		
含平键在内的轴高 (DIN 6885-1)	Shaft height including feather key (DIN 6885-1)	H1		16	22,5	28		
到轴肩的距离	Shaft length from shoulder	L4		26	32	45		
平键长度	Feather key length	L5		20	25	35		
到轴端的距离	Distance from shaft end	L6		2	2,5	5		
中心孔 (DIN 332 DR 形	Center hole (DIN 332, type DR)	C		M5x12,5	M6x16	M10x22		
光滑输出轴	Smooth output shaft							B
到轴肩的距离	Shaft length from shoulder	L4		26	32	45		

(2) 所有的尺寸单位为mm
(3) 减速机级数

(2) Dimensions in mm
(3) Number of stages

HLAE 密封套件
HLAE Sealing kit

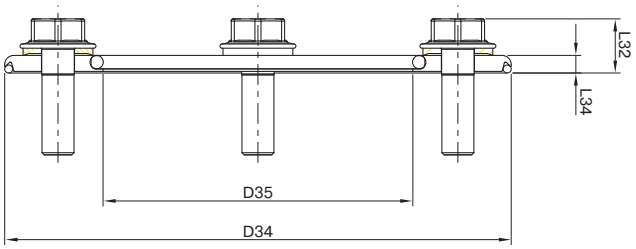

HLAE 配有可自由安装的密封套件可提供最大程度的卫生级保护，并可普遍适用于不同的设备侧面安装厚度。
即为设备提供了最大程度的灵活性，同时又能满足最严格的卫生级别要求。

The freely positionable sealing kit for the HLAE provides maximum hygienic protection, making it universally suitable for different machine side thicknesses.
It therefore gives you maximum flexibility for connecting to the machine while satisfying the strictest hygienic requirements.

				HLAE070	HLAE090	HLAE110
产品编号	**Art. No.**			**63911**	**63858**	**64130**
外径	Outside diameter	D34	mm	75	95	120
内径	Inner diameter	D35		40	58	65
总长	Overall length	L32		8,5	9,5	11,5
垫片长度	Disc length	L34		3	3	3
对边宽度	Width across flats	SW30		8	10	13
数量 x 螺钉 x 长度	Quantity x screw x length	G30		4 x M5x16	4 x M6x20	4 x M8x25

关于密封套件的安装步骤，请参考相应的安装说明(www.neugart.com)。 CAD数据下载地址：www.neugart.com

For correct installation of the sealing kit, please refer to the corresponding mounting instructions (www.neugart.com). CAD data can be accessed at www.neugart.com

供货范围

1 x 不锈钢电解抛光垫片

1 x EPDM 密封圈(针对设备应用的密封件)

1 x EPDM 密封圈(针对减速机的密封件)

4 x USIT-VA 包括带 EPDM 涂层的密封垫片，符合 EHEDG标准

4 x 卫生型设计不锈钢螺钉（电解抛光），符合 EHEDG标准

Included parts

1 x electropolished stainless steel disc

1 x EPDM sealing ring (seal to application)

1 x EPDM sealing ring (seal to gearbox)

4 x USIT-VA with EPDM coated sealing washer, EHEDG-compliant

4 x Hygienic Design stainless steel screw (electropolished), EHEDG-compliant