PFHE

用于高负载的法兰输出轴式行星减速机

PFHE是一种极具吸引力的产品，适用于高径向负载应用。这种特殊的、预胀紧的角接触滚子轴承，搭配符合 ISO 9409-1 标准的法兰输出轴，使得 **PFHE** 的承载能力极高。借助径向轴密封，这种减速机的输出端的防护等级达到 IP65，因此能够胜任严苛的使用环境。

The planetary gearbox with flange output shaft for high-load applications

The **PFHE** represents an economically attractive alternative for high-load applications in which high radial loads occur. The combination of special pre-stressed inclined roller bearings and a flanged output shaft in accordance with ISO 9409-1 gives the **PFHE** a very high load capacity. Thanks to the radial shaft seal that is used, this gearbox achieves protection class IP65 at the output side and can therefore also withstand adverse usage conditions.

额定扭矩 Nominal output torque	**15 - 260 Nm**
径向力 Radial force	**2300 - 5150 N**
轴向力 Axial force	**2850 - 6450 N**
回程间隙 Torsional backlash	**7 - 12 arcmin**
防护等级 Protection class	**IP65**

结构尺寸
Frame sizes

64 **90** **110**

经济型
Economy Line

旋转方向 同方向
Equidirectional rotation

圆形特大号输出法兰
Extra large round type output flange

径向轴密封
Rotary shaft seal

行星齿轮架
Planet carrier in disc design

同轴减速机
Coaxial gearbox

直齿
Spur gear

配有预紧的角接触滚子轴承
Preloaded angular contact roller bearings

法兰输出轴（按 ISO 9409-1 标准）
Flange output shaft (ISO 9409-1)

可选：装有小齿轮的高精度减速机
132页
Option: Planetary gearbox with mounted pinion on page 132

技术特点的详细解释，请从第173页读起。
Detailed explanations of the technical features starting on page 173.

Code	减速机参数	Gearbox characteristics			PFHE064	PFHE090	PFHE110	p[1]
	使用寿命 (L_{10h})	Service life (L_{10h})	t_L	h	30.000			
	满载时效率[2]	Efficiency at full load[2]	η	%	97			
	最低工作温度	Min. operating temperature	T_{min}	˚C	-25			
	最高工作温度	Max. operating temperature	T_{max}		90			
	防护等级	Protection class			IP65			
S	标准润滑	Standard lubrication			润滑脂（终生润滑）/ Grease (lifetime lubrication)			
F	食品级润滑	Food grade lubrication			润滑脂（终生润滑）/ Grease (lifetime lubrication)			
L	低温润滑[3]	Low temperature lubrication[3]			润滑脂（终生润滑）/ Grease (lifetime lubrication)			
	安装位置	Installation position			任意 / Any			
S	标准回程间隙	Standard backlash	j_t	arcmin	< 10	< 7	< 7	1
					< 12	< 9	< 9	2
	抗扭刚度[2]	Torsional stiffness[2]	c_g	Nm / arcmin	5,4 - 10,6	16,1 - 32,5	37,0 - 77,0	1
					5,0 - 11,5	15,7 - 38,5	30,0 - 95,0	2
	减速机重量[2]	Gearbox weight[2]	m_G	kg	1,1	3,1	5,9 - 6,0	1
					1,3 - 1,4	3,5 - 3,8	7,6 - 7,9	2
S	标准的箱体表面	Standard surface			箱体：钢 – 热处理后氧化（黑色） Housing: Steel – heat-treated and post-oxidized (black)			
	运行噪音[4]	Running noise[4]	Q_g	dB(A)	60	62	65	
	基于减速机输入法兰的最大弯矩[5]	Max. bending moment based on the gearbox input flange[5]	M_b	Nm	8	16	40	

输出轴载荷	Output shaft loads			PFHE064	PFHE090	PFHE110	p[1]
20,000 h 径向力[6][7]	Radial force for 20,000 h[6][7]	$F_{r\,20.000\,h}$	N	2300	4100	5150	
20,000 h 轴向力[6][7]	Axial force for 20,000 h[6][7]	$F_{a\,20.000\,h}$		2850	5450	6450	
30,000 h 径向力[6][7]	Radial force for 30,000 h[6][7]	$F_{r\,30.000\,h}$		2000	3650	4550	
30,000 h 轴向力[6][7]	Axial force for 30,000 h[6][7]	$F_{a\,30.000\,h}$		2500	4800	5600	
最大径向力[7][8]	Maximum radial force[7][8]	$F_{r\,Stat}$		2300	4100	5150	
最大轴向力[7][8]	Maximum axial force[7][8]	$F_{a\,Stat}$		2850	5450	6450	
20,000 h 倾斜力矩[6][8]	Tilting moment for 20,000 h[6][8]	$M_{K\,20.000\,h}$	Nm	110	278	407	
30,000 h 倾斜力矩[6][8]	Tilting moment for 30,000 h[6][8]	$M_{K\,30.000\,h}$		96	248	360	

转动惯量	Moment of inertia			PFHE064	PFHE090	PFHE110	p[1]
转动惯量[2]	Mass moment of inertia[2]	J	$kgcm^2$	0,073 - 0,224	0,407 - 1,170	1,505 - 3,658	1
				0,064 - 0,132	0,356 - 0,667	1,377 - 2,432	2

(1) 减速机级数
(2) 传动比相关的数值可在 Tec Data Finder 中检索 – www.neugart.com
(3) T_{min} = -40°C. 理想运行温度最高为 50°C
(4) 距离减速机1 m 时; 在输入转速为 n_1=3000 min^{-1} 且无负荷时测得; i=5
(5) 最大电机重量* (单位 : kg) = 0.2 x M_b / 电机长度 (单位: m)
* 电机重量对称分布
* 水平和固定的安装位置
(6) 数据以 n_2=100 min^{-1} 的输出轴转速为准。
(7) 以输出轴中心为准
(8) 更改 T_{2N}, F_r, F_a 以及周期和轴承使用寿命时, 数值存在偏差（部分较高）。利用 NCP 针对应用进行专门设计 – www.neugart.com

(1) Number of stages
(2) The ratio-dependent values can be retrieved in Tec Data Finder – www.neugart.com
(3) T_{min} = -40°C. Optimal operating temperature max. 50°C
(4) Sound pressure level from 1 m, measured on input running at n_1=3000 rpm no load; i=5
(5) Max. motor weight* in kg = 0.2 x M_b / motor length in m
* with symmetrically distributed motor weight
* with horizontal and stationary mounting
(6) These values are based on an output shaft speed of n_2=100 rpm
(7) Based on the end of the output shaft
(8) Other (sometimes higher) values following changes to T_{2N}, F_r, F_a, cycle, and service life of bearing. Application specific configuration with NCP – www.neugart.com

输出扭矩	Output torques			PFHE064	PFHE090	PFHE110	i[1]	p[2]
额定输出扭矩[3]	Nominal output torque[3]	T_{2N}	Nm	28	85	115	3	1
				38	115	155	4	
				40	110	195	5	
				25	65	135	7	
				18	50	120	8	
				15	38	95	10	
				44	130	210	9	2
				44	120	260	12	
				44	110	230	15	
				44	120	260	16	
				44	120	260	20	
				40	110	230	25	
				44	120	260	32	
				40	110	230	40	
				18	50	120	64	
				15	38	95	100	
最大输出扭矩[4]	Max. output torque[4]	T_{2max}	Nm	45	136	184	3	1
				61	184	248	4	
				64	176	312	5	
				40	104	216	7	
				29	80	192	8	
				24	61	152	10	
				70	208	336	9	2
				70	192	416	12	
				70	176	368	15	
				70	192	416	16	
				70	192	416	20	
				64	176	368	25	
				70	192	416	32	
				64	176	368	40	
				29	80	192	64	
				24	61	152	100	

(1) 传动比 ($i=n_1/n_2$)
(2) 减速机级数
(3) 利用 NCP 针对应用进行专门设计 – www.neugart.com
(4) 允许输出轴转动30.000转; 参见第 166 页

(1) Ratios ($i=n_1/n_2$)
(2) Number of stages
(3) Application specific configuration with NCP – www.neugart.com
(4) 30,000 rotations of the output shaft permitted; see page 167

输出扭矩	Output torques			PFHE064	PFHE090	PFHE110	i[1]	p[2]
急停扭矩[3]	Emergency stop torque[3]	T_{2Stop}	Nm	66	180	390	3	1
				88	240	520	4	
				80	220	500	5	
				80	178	340	7	
				80	190	380	8	
				80	200	480	10	
				88	260	500	9	2
				88	240	520	12	
				88	220	500	15	
				88	240	520	16	
				88	240	520	20	
				80	220	500	25	
				88	240	520	32	
				80	220	500	40	
				80	190	380	64	
				80	200	480	100	

输入转速	Input speeds			PFHE064	PFHE090	PFHE110	i[1]	p[2]
T_{2N} 和 S1 时的平均热输入转速[4][5]	Average thermal input speed at T_{2N} and S1[4][5]	n_{1N}	min^{-1}	2350[6]	1900[6]	1600[6]	3	1
				2950[6]	2200[6]	1900[6]	4	
				3550[6]	2750[6]	2200[6]	5	
				4500	4000[6]	3350[6]	7	
				4500	4000	3500[6]	8	
				4500	4000	3500	10	
				4500	4000[6]	3300[6]	9	2
				4500	4000	3500[6]	12	
				4500	4000	3500	15	
				4500	4000	3500	16	
				4500	4000	3500	20	
				4500	4000	3500	25	
				4500	4000	3500	32	
				4500	4000	3500	40	
				4500	4000	3500	64	
				4500	4000	3500	100	
最高机械输入转速[4]	Max. mechanical input speed[4]	n_{1Limit}	min^{-1}	7500	7000	6500		

(1) 传动比 ($i=n_1/n_2$)
(2) 减速机级数
(3) 允许 1000 次
(4) 利用 NCP 针对应用设计转速 – www.neugart.com
(5) 定义请参见第 166 页
(6) 在 50% T_{2N} 输出和 S1 模式下 的平均热输入转速

(1) Ratios ($i=n_1/n_2$)
(2) Number of stages
(3) Permitted 1000 times
(4) Application-specific speed configurations with NCP – www.neugart.com
(5) See page 167 for the definition
(6) Average thermal input speed at 50% T_{2N} and S1

PFHE064
PFHE090

PFHE110

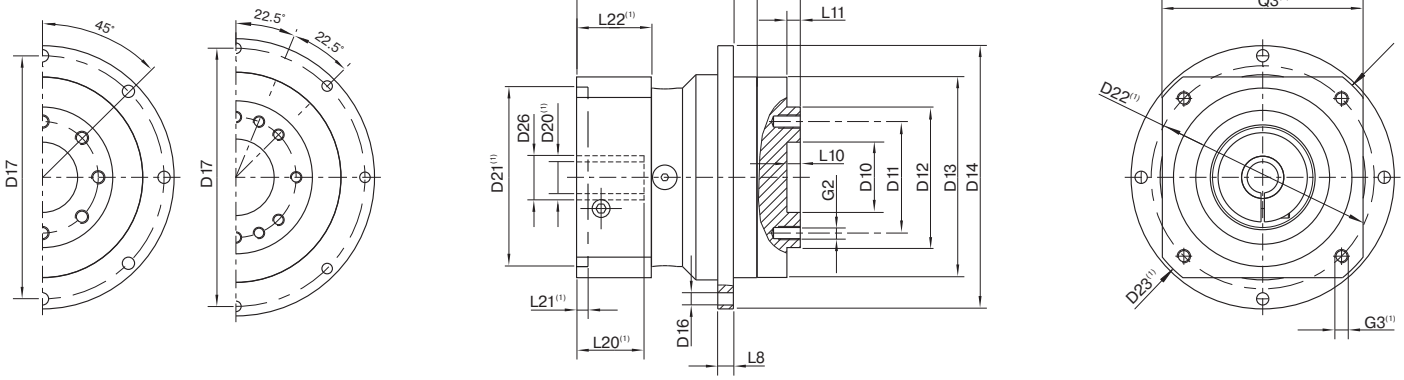

图示为带平键的 PFHE090 / 1 级 / 法兰输出轴 / 19 mm 锁紧系统 / 适配电机法兰 - 单一法兰 / B5 电机法兰类型
Drawing corresponds to a PFHE090 / 1-stage / flange output shaft / 19 mm clamping system / motor adaptation – one part / B5 flange type motor

(1) 具体尺寸视电机/减速机法兰而定。可以在 www.neugart.com 下 Tec Data Finder中针对每个电机适配电机特有的输入法兰几何尺寸。
(1) The dimensions vary with the motor/gearbox flange. The input flange dimensions can be retrieved for each specific motor in Tec Data Finder at www.neugart.com

几何尺寸(2)	Geometry(2)			PFHE064	PFHE090	PFHE110	p(3)	Code
输出端定位凹槽直径	Centering diameter output shaft	D10	H7	20	31,5	40		
输出端安装孔节圆直径	Pitch circle diameter output shaft	D11		31,5	50	63		
法兰输出轴的直径	Flange output shaft diameter	D12	h7	40	63	80		
输出法兰定位凸台直径	Centering diameter output flange	D13		64	90	110		
输出法兰直径	Flange diameter output	D14		86	118	145		
输出端安装孔直径	Mounting bore output	D16		4,5 8x45°	5,5 8x45°	5,5 8x45°		
输出法兰安装孔节圆直径	Pitch circle diameter output flange	D17		79	109	135		
最小总长	Min. total length	L1		72	100,5	117	1	
				84,5	118	144	2	
输出端法兰厚度	Flange thickness output	L8		4	7	8		
输出轴定位凸台深度	Centering depth output shaft	L10		4	6	6		
		L11		3	6	7		
输出法兰定位凸台深度	Centering depth output flange	L12		7,5	10,5	10,5		
输出法兰长度	Output flange length	L13		19,5	30	29		
电机轴直径j6/k6	Motor shaft diameter j6/k6	D20		更多信息见第 163/164 页 More information on page 163/164				
输入端锁紧系统直径	Clamping system diameter input	D26						
法兰输出轴 (相似的 ISO 9409-1)	Flange output shaft (similar ISO 9409-1)							D
数量 x 螺纹 x 深度	Number x thread x depth	G2		8 x M5x7	8 x M6x10	12 x M6x12		

(2) 所有的尺寸单位为mm
(3) 减速机级数

(2) Dimensions in mm
(3) Number of stages